THE INFORMATION AND DESIGN HEREIN WAS ORIGINATED BY AND IS THE PROPERTY OF SKYLOCK INDUSTRIES INCORPORATED. SKYLOCK INDUSTRIES INCORPORATED RESERVES ALL PATENT, PROPRIETARY, DESIGN MANUFACTURING, REPRODUCTION, USE AND SALES RIGHTS THERETO, AND TO ANY ARTICLE DISCLOSED THEREIN EXCEPT TO THE EXTENT RIGHTS ARE EXPRESSLY GRANTED TO OTHERS. THE FOREGOING DOES NOT APPLY TO VENDOR PROPRIETARY PARTS.

REVISIONS

ZONE	LTR	DESCRIPTION	DATE	APPROVED
	B	SEE ECN B		

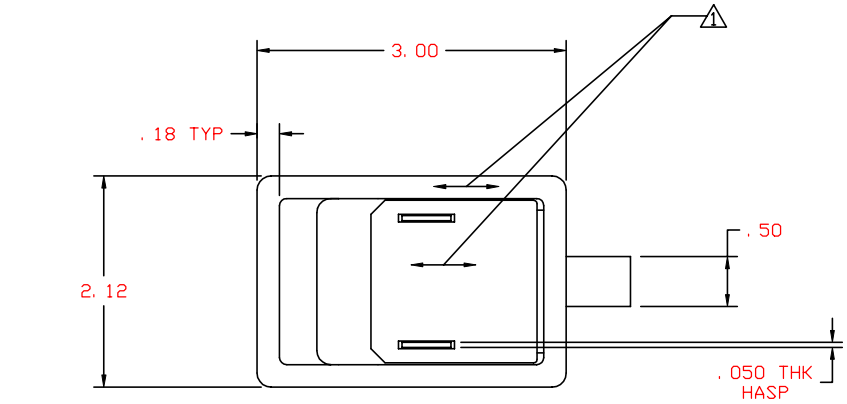

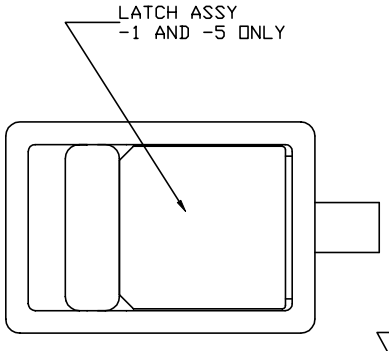

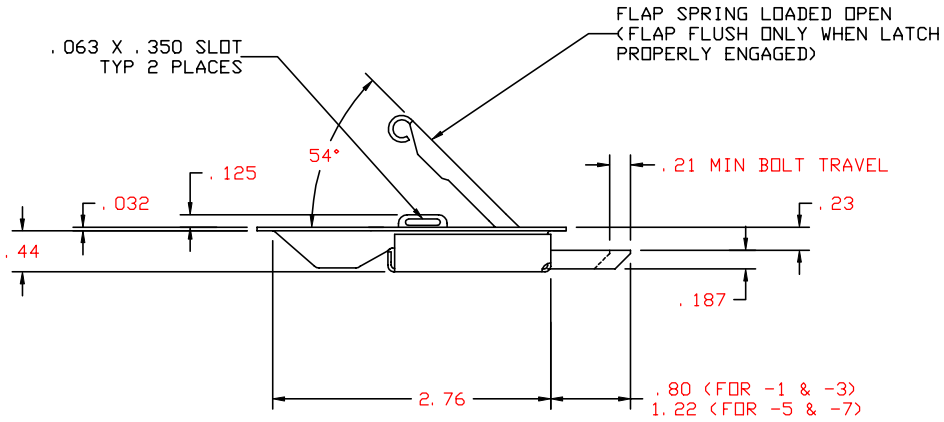

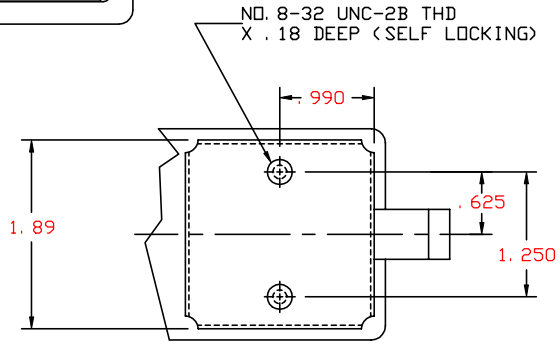

QTY REQD	PART NO.	DESCRIPTION	MATERIAL SIZE APPLICATION
	-15	LATCH ASSY	SAME AS -7 EXCEPT AS NOTED
	-13	LATCH ASSY	SAME AS -5 EXCEPT AS NOTED
	-11	LATCH ASSY	SAME AS -3 EXCEPT AS NOTED
	-9	LATCH ASSY	SAME AS -4 EXCEPT AS NOTED
	-7	LATCH ASSY	SAME AS -3 EXCEPT AS NOTED
	-5	LATCH ASSY	SAME AS -1 EXCEPT AS NOTED
	-3	LATCH ASSY	WITH HASP
	-1	LATCH ASSY	WITHOUT HASP

PARTS LIST

4. -9 LATCH ASSY THRU -15 FLAP HANDLE SPRING LOADED DOWN AT ALL TIMES.
3. PROTECTIVE FINISH: BOLT, DRY FILM LUBRICATE PER MIL-L-4610, TYPE I, DRILUBE #2, OR EQUIV.
   ALL OTHER PARTS, PASSIVATE PER AMS-QQ-P-35, TYPE II, OR EQUIV.
2. MAT'L: 300 SERIES CRES, PER AMS-5640N, OR EQUIV.
1. DECORATIVE FINISH: SATIN BUFF LENGTHWISE TO PART SURFACE.

REMOVE ALL BURRS AND SHARP CORNERS.

NOTES: UNLESS OTHERWISE SPECIFIED

UNLESS OHERWISE SPECIFIED
DIMENSIONS ARE IN INCHES
TOLERANCES ON
DECIMALS .X ± .1, .XX ± .03, .XXX ± .010 — ANGLES ± 0° 30' — DRILLED HOLES AND 10387

DO NOT SCALE THIS DRAWING

MATERIAL - FINISH

NEXT ASSY

FINAL ASSY

DRAWN BY M. FORTES
CHECKED
ENGINEER
MFG
QC

USED ON

SKYLOCK INDUSTRIES INCORPORATED
MONROVIA CALIFORNIA U. S. A.

LATCH ASSY

SIZE	CODE IDENT. NO.	DRAWING NO.	REV.
C	51941	20078	B

SCALE NONE WT. SHEET 1 OF 1